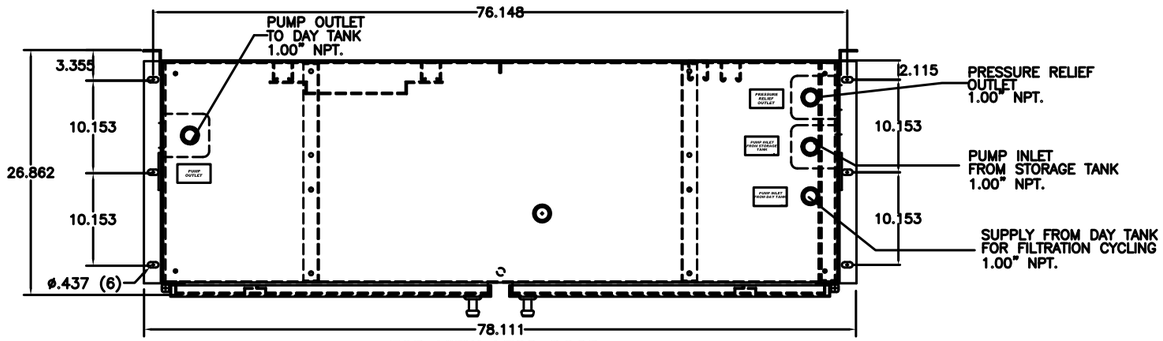

TOP VIEW LESS DOOR

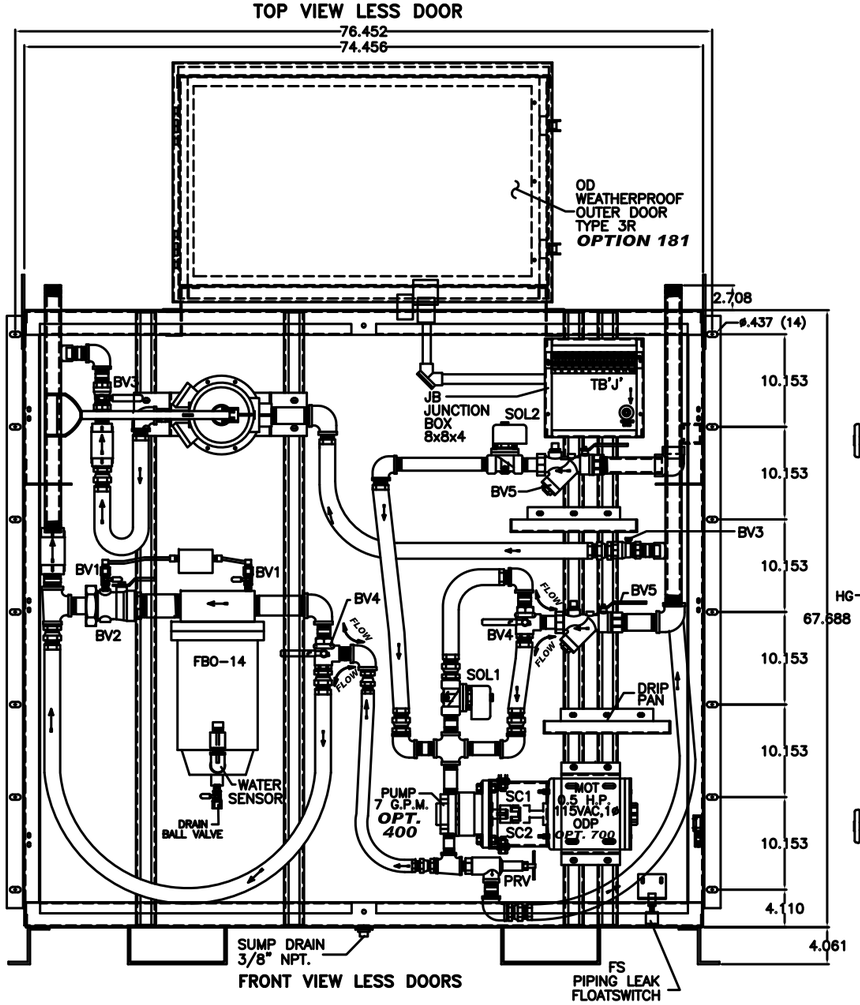

FRONT VIEW LESS DOORS

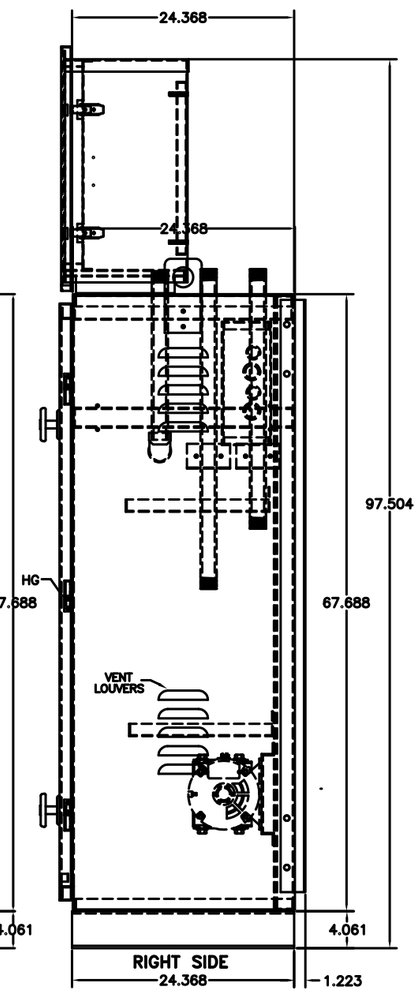

RIGHT SIDE

NOTES

1) ALL DIMENSIONS ±.125
2) DUE TO SYSTEM COMPLEXITY SOME COMPONENTS MAY NOT BE VISIBLE IN ALL VIEWS
3) CONSTRUCTION SEAM WELDED 14 GA. H.R.S.
4) UNIT POWDER COATED 61 GRAY

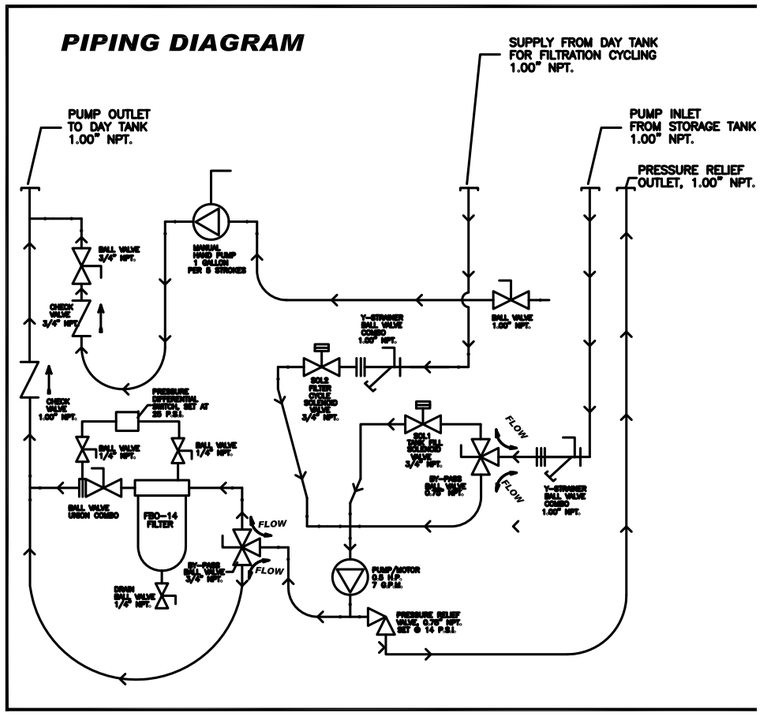

THE INFORMATION HEREON IS THE PROPERTY OF SIMPLEX, INC., AND/OR ITS SUBSIDIARIES. WITHOUT WRITTEN PERMISSION ANY COPYING, TRANSMITTAL TO OTHERS AND USE EXCEPT THAT FOR WHICH IT IS LOANED IS PROHIBITED. DESIGN SUBJECT TO CHANGE WITHOUT NOTICE.
©2010 SIMPLEX, INC. ALL RIGHTS RESERVED.

SIMPLEX		SPRINGFIELD, ILLINOIS
SCALE :	APPROVED BY :	DRAWN BY : RER
DATE : 08-02-10		REVISED :
200 GALLON FILTER TANK PLUMBING PICTORIAL		
STANDARD		DRAWING NUMBER 212480