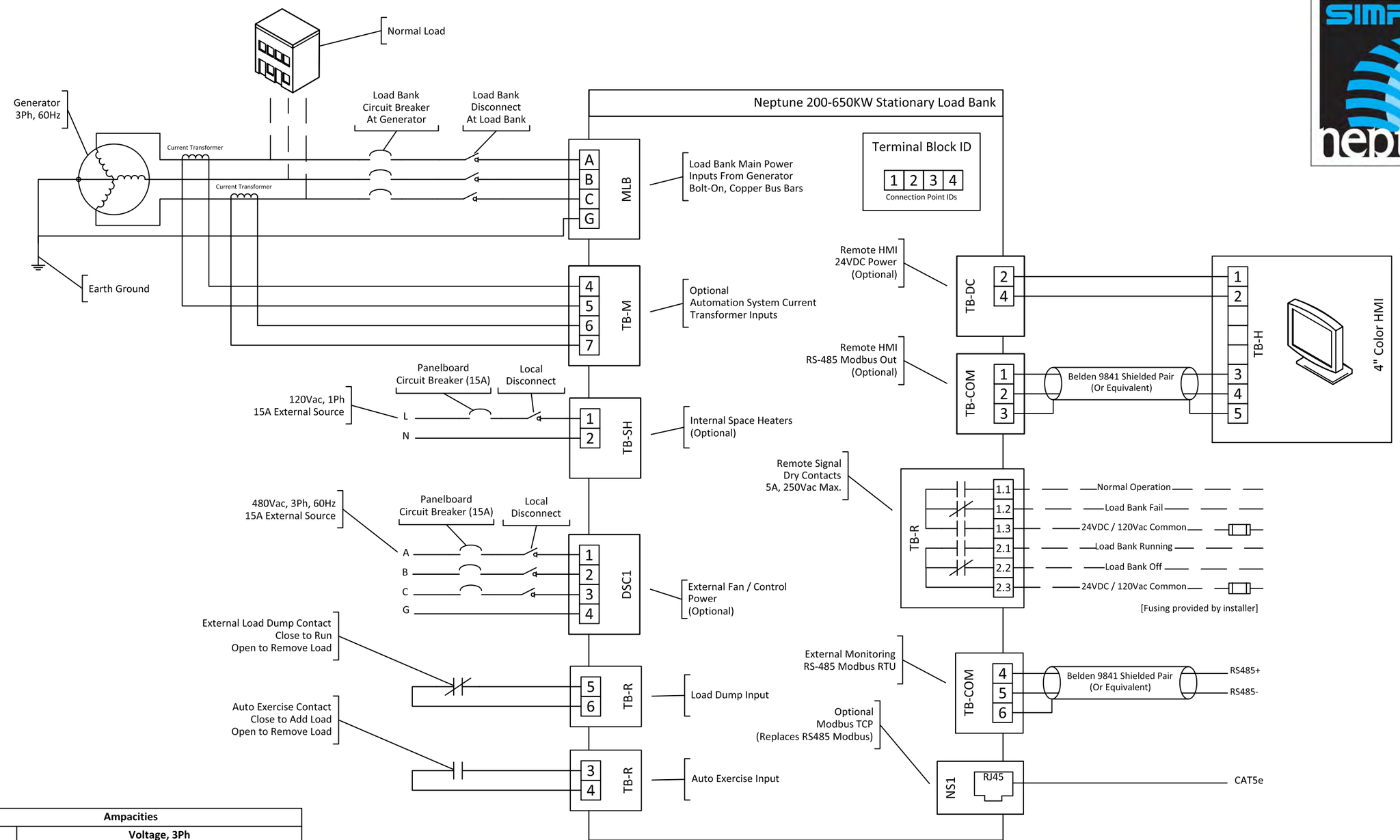

Ampacities					
	Voltage, 3Ph				
KW	208	240	416	480	600
200	580	501	290	251	200
250	719	621	359	311	249
300	833	742	428	371	297
350	972	842	498	431	345
400		962	567	491	393
450			637	551	441
500			706	611	489
550			775	672	537
600			833	732	585
650			902	792	633

Installation Notes

1. Generator neutral must be connected to earth ground and connected to load bank as shown.
2. Provide external circuit protection for dry contacts as shown.
3. Field installed wiring must be rated 600V, 60C or higher for circuits < 100A, 75C or higher for circuits >= 100A. Use copper conductors only. Size conductors in accordance with NEC Table 310.15, with 14AWG being the minimum required gauge for any field connection.
4. See NEC Table 310.15 for allowable ampacities of cables in free air or conduit and at site ambient temperature.

DANGER

1. High Voltage (600Vac Class)
2. High Temperatures - Air Exhaust Up to 600F
3. Elevated Interior Temperatures - Up to 175F
4. Rotating Fan Blade - 1800RPM, 5.0HP

SIMPLEX, INC.
5300 RISING MOON ROAD
SPRINGFIELD, ILLINOIS 62711-6228

THE INFORMATION HEREON IS THE PROPERTY OF SIMPLEX, INC., AND/OR ITS SUBSIDIARIES, WITHOUT WRITTEN PERMISSION ANY COPYING, TRANSMITTAL TO OTHERS AND USE EXCEPT THAT FOR WHICH IT IS LOANED IS PROHIBITED.
© 2013 SIMPLEX, INC.
ALL RIGHTS RESERVED

THIRD ANGLE PROJECTION

REVISIONS & UPDATES

REV	DATE	DESCRIPTION	INT	APPR
D	12/26/2013	Added Auto Exercise	JLW	PWC
C	12/19/2013	Updated IMG Refs, Titleblock	JLW	PWC
B	12/10/2013	Updated TB Designations	JLW	PWC
A	06/28/2013	Original Revision	JLW	PWC

TOLERANCES
X.XXX ± 0.005"
X.XX ± 0.010"
X.X ± 0.020"
FRACTIONAL ± 1/32"
ANGLES ± 1°
SURFACES 125

APPROVED BY: PWC
DRAWN BY: JLW
SCALE:
SHEET SIZE: ANSI B
WORK ORDER
NA
DESCRIPTION
Neptune Customer Connections

DRAWING NUMBER
ACD-00000509

SHEET NUMBER 1/1
REVISION D