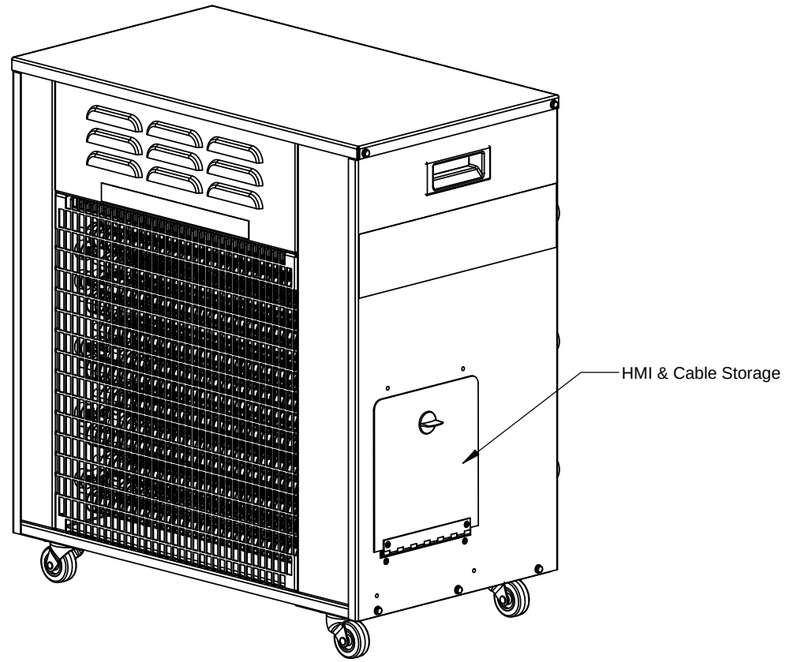

REAR ISOMETRIC VIEW

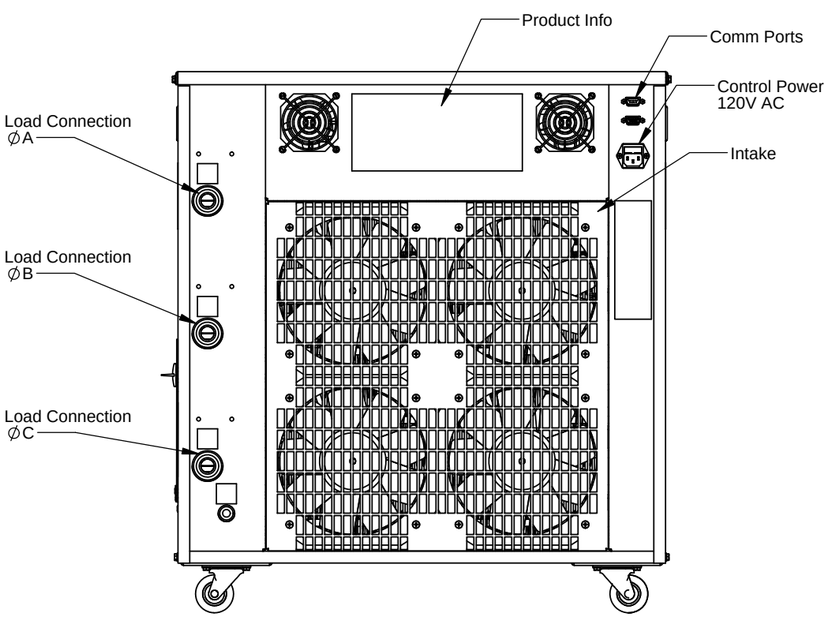

FAN SIDE

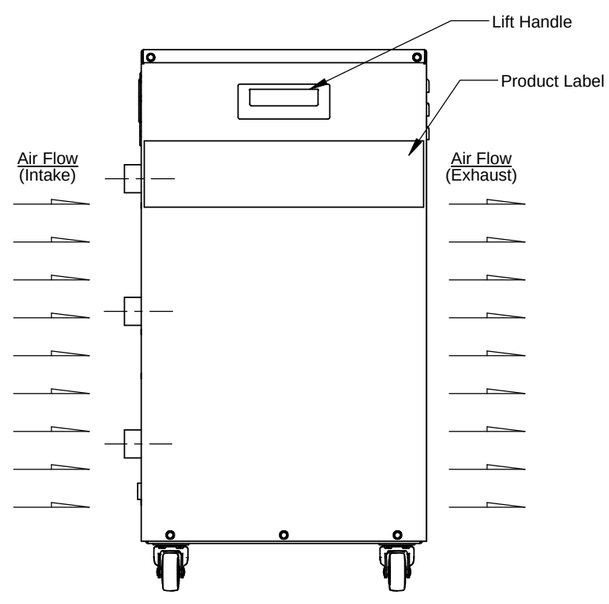

FRONT SIDE

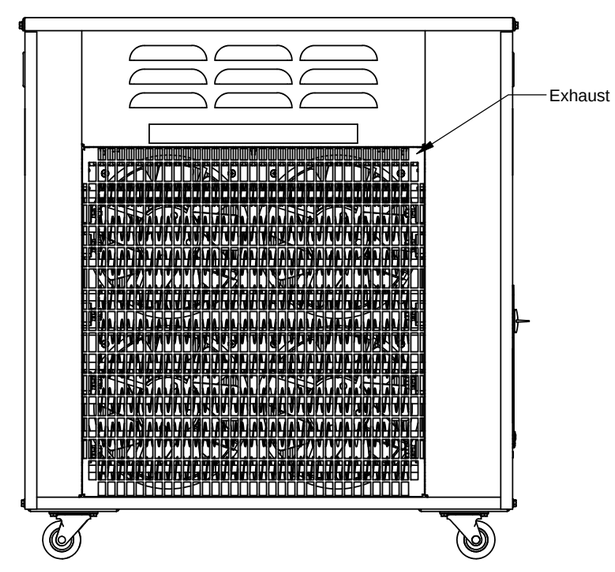

EXHAUST SIDE

SIMPLEX

SIMPLEX, INC.
5300 RISING MOON ROAD
SPRINGFIELD, ILLINOIS 62711-6228

THE INFORMATION HEREON IS THE PROPERTY OF SIMPLEX, INC., AND/OR ITS SUBSIDIARIES. WITHOUT WRITTEN PERMISSION ANY COPYING, TRANSMITTAL TO OTHERS AND USE EXCEPT THAT FOR WHICH IT IS LOANED IS PROHIBITED.
2012 SIMPLEX, INC.©
ALL RIGHTS RESERVED

THIRD ANGLE PROJECTION

REVISIONS & UPDATES

REV	DATE	DESCRIPTION	INT	APPR

TOLERANCES
X.XXX ± 0.005"
X.XX ± 0.010"
X.X ± 0.020"
FRACTIONAL ± 1/32"
ANGLES ± 1°
SURFACES 125

APPROVED BY:	
DRAWN BY:	sbarton
SCALE:	1:8
SHEET SIZE:	B-SIZE
SHEET TITLE:	Sheet 1
W.O. #:	-
WEIGHT:	95.52 lbs

PROJECT
Powerstar & Northstar

PART DESCRIPTION
Decal-Label Assembly Northstar 150

PART NUMBER
ASM-00004433

PART REVISION:

DRAWING NUMBER
DWG-00006156

SHEET NUMBER	REVISION
1 / 1	-